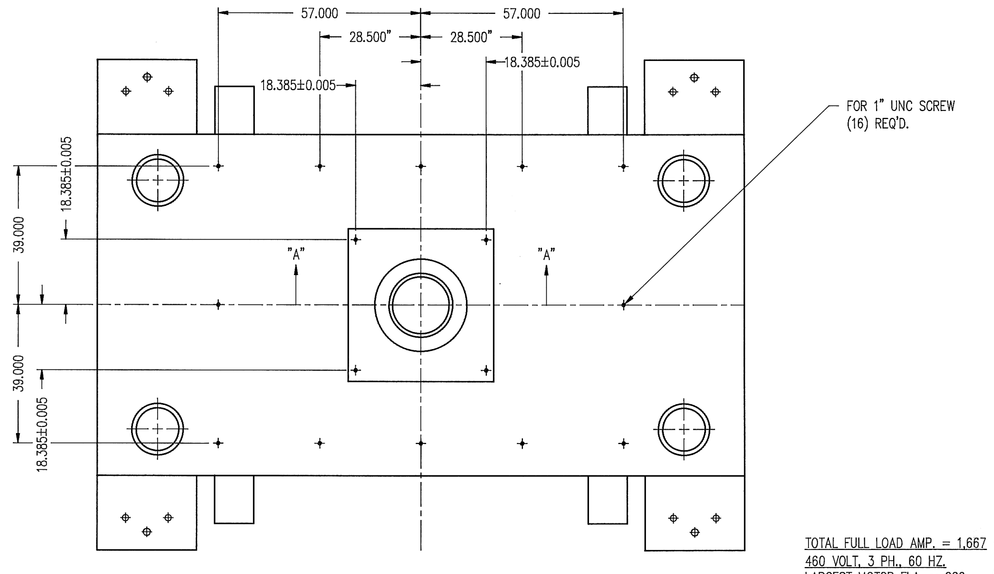

BASE VIEW

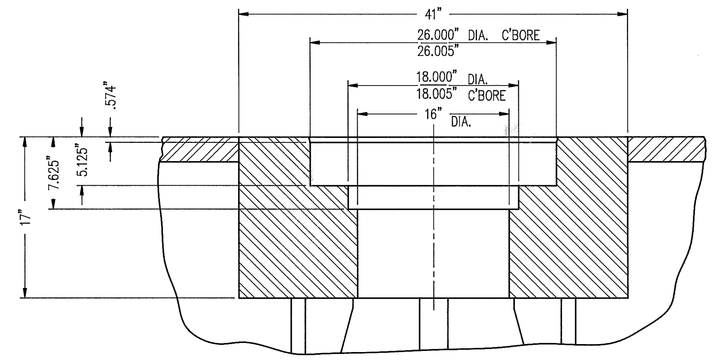

VIEW "A" – "A"
SCALE 1/8"= 1"

PRESS MEMBERS	WEIGHT
BASE	70,000 #
TIE ROD NUTS (HYDRAULIC)	6,000 #
SLIDE & GIBS	50,000 #
TOP PLATEN	55,000 #
MAIN CYLINDER ASSEMBLY	45,000 #
KICKER CYLINDER ASSEMBLY	25,000 #
HOUSING & TIE ROD & LOWER NUTS	100,000 #
OIL TANK & MANIFOLD	60,000 #
CATWALK	2,000 #
MOTORS & PUMPS	20,000 #
ELECTRICAL CABINET	5,000 #
MISC. HARDWARE	10,000 #
BOLSTERS	20,000 #
TOTAL	468,000 #

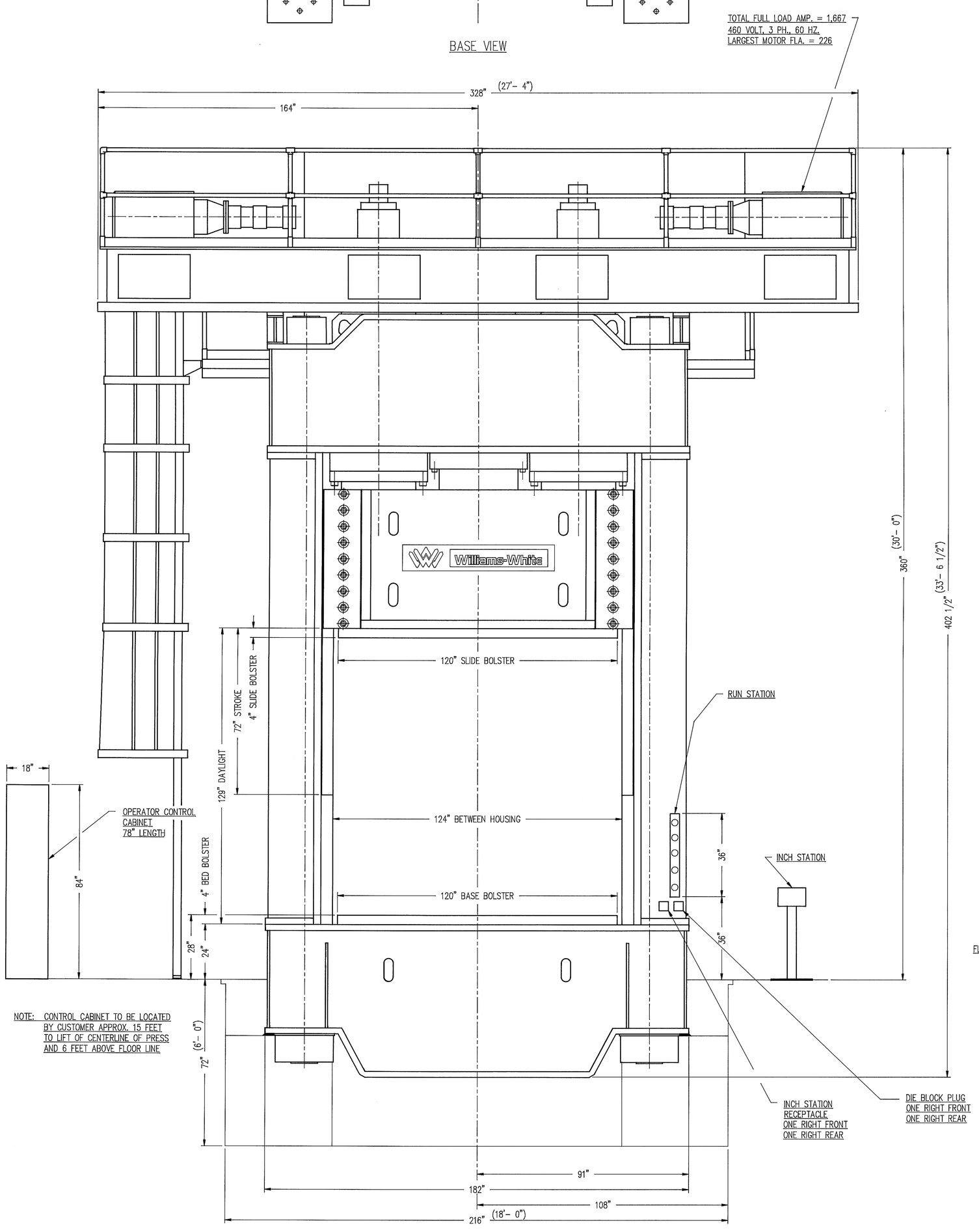

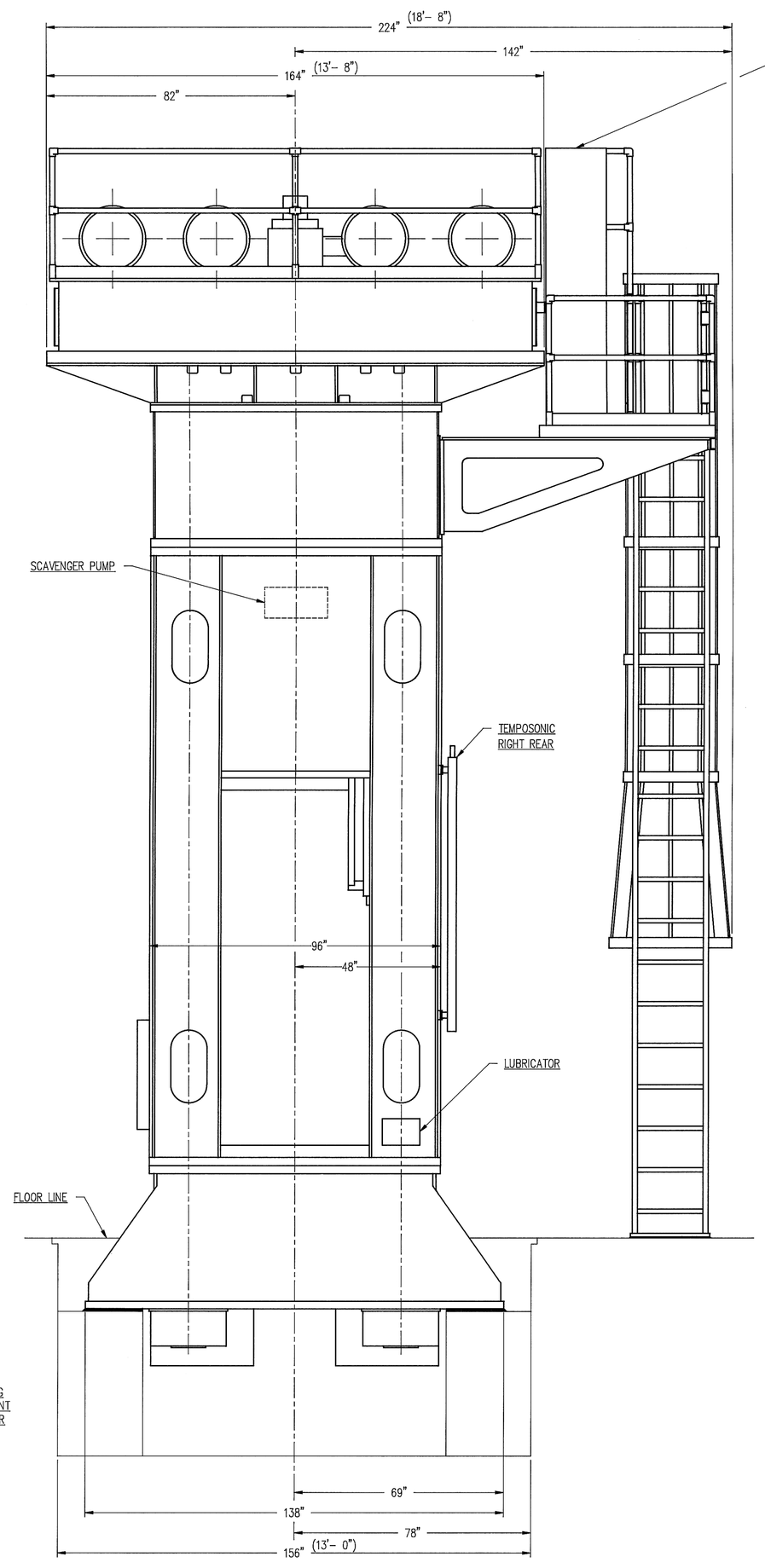

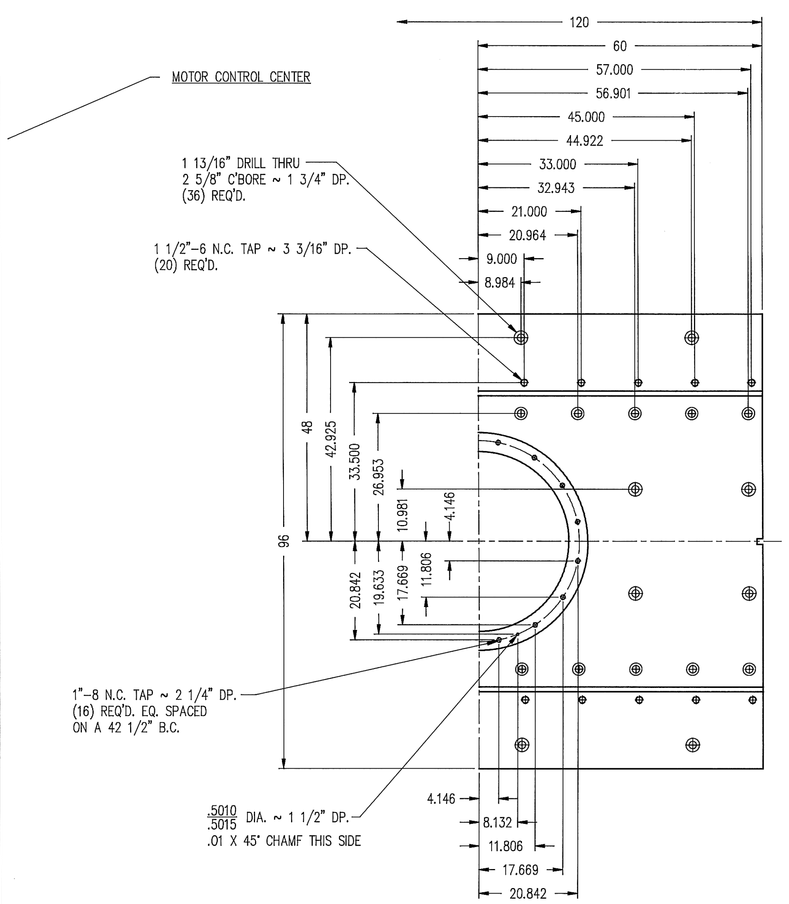

SYMETRICAL HALF OF SLIDE BOLSTER

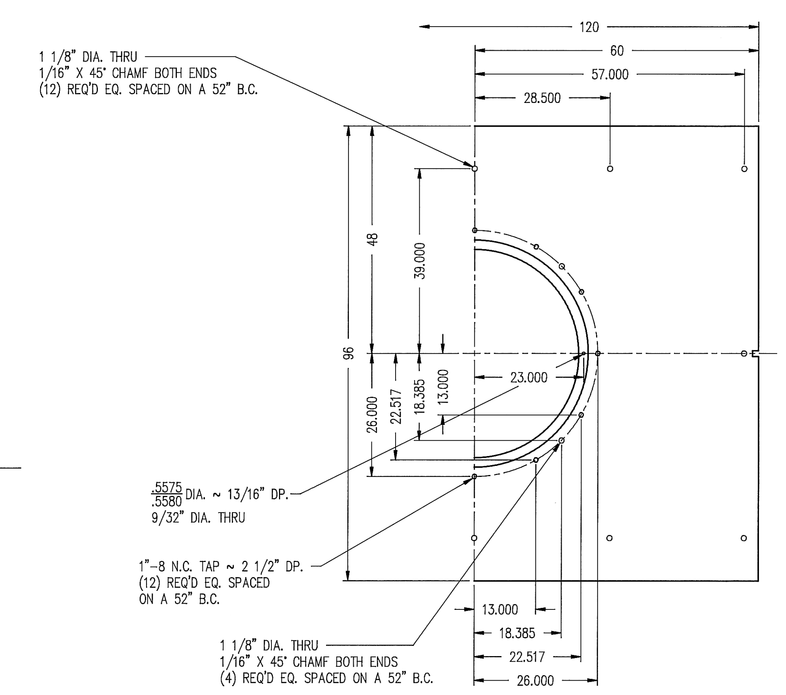

SYMETRICAL HALF OF BASE BOLSTER

Williams-White	2000 TON, HOUSING TYPE, M.D.,	DES. T.D.H.	DATE 4/23/91	FILE NO. X-2559	
	HYDRAULIC PRESS	DR. A.W.	SCALE 3/64"	DRAW'G NO. 4914 WN	
	GENERAL ARRANGEMENT	CH. T.D.H.	MAT.	PART NO.	
				CHECKOUT	